KEPLER PETITE

Arihiro Miyake

Small version of the Kepler lamp only with down light. Suspension lamp in extruded aluminum powder coated. Available versions in white, black and the new gold finish. The continuous line is made through a three-dimensional process of extruded aluminum, designed based on the geometric principle of the Moebius strip.

DOWNLIGHT 2700K

LAMPING

Source	Linear LED
Total power	50W
Emission	diffused downlight
Switching	dimmable 1-10V
Tension	110/240V
Color temperature	2700K
Luminous flux	2500lm
Typ cri	85
Energy class	A+
Materials	aluminium + PC
Notes	adjustable cable length from 2,5m to 0,4m, DALI version on request
Net lamp weight	1,3 kg

Codes	*Structure*
800KESLWW541	white
800KESLNN541	black
800KESLOW541	gold painted

PACKAGE

Package 01	Dimension: 50x50x22 cm / Gross weight: 3,1 kg

Certificazioni

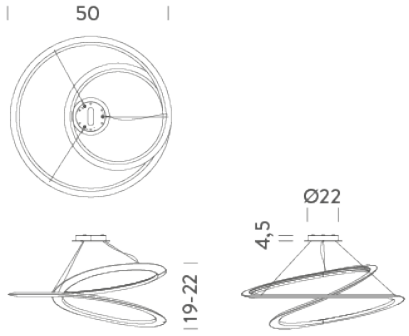

DOWNLIGHT 3000K

LAMPING

Source	Linear LED
Total power	50W
Emission	diffused downlight
Switching	dimmable 1-10V
Tension	110/240V
Color temperature	3000K
Luminous flux	2500lm
Typ cri	85
Energy class	A+
Materials	aluminium + PC
Notes	adjustable cable length from 2,5m to 0,4m, DALI version on request
Net lamp weight	1,3 kg

Codes	*Structure*
800KESLWW521	white
800KESLNN521	black
800KESLOW521	gold painted

PACKAGE

Package 01	Dimension: 50x50x22 cm / Gross weight: 3,1 kg
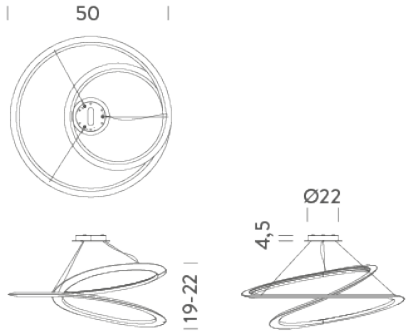
Certificazioni